ZAKŁAD IZOLATORÓW ELEKTROTECHNICZNYCH
BOPLAST Sp. z o.o.

Adres:
ul. B.Krzywoustego 1, 84-300 Lębork
tel. +48 59 862 01 86; tel. 516 198 886
www.boplast.pl e-mail: boplast@boplast.pl

IZOLATORY WSPORCZE * IZOLATORY PRZEPUSTOWE * WYROBY IZOLACYJNE * USŁUGI

# Bushing insulator 12 kV
# type SPWSG.bp1-20/12/1250.02

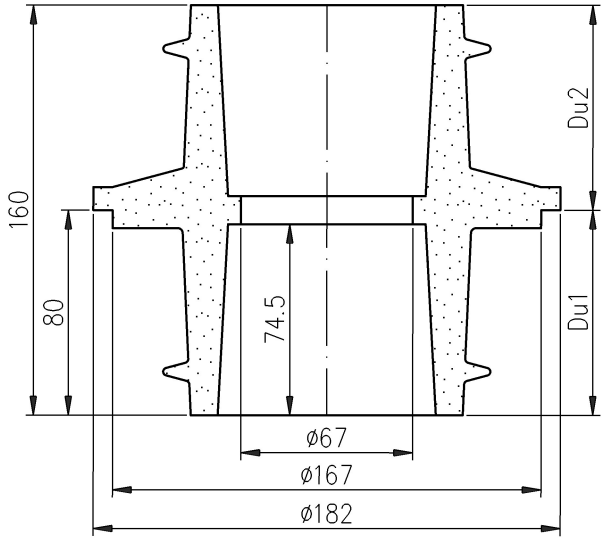


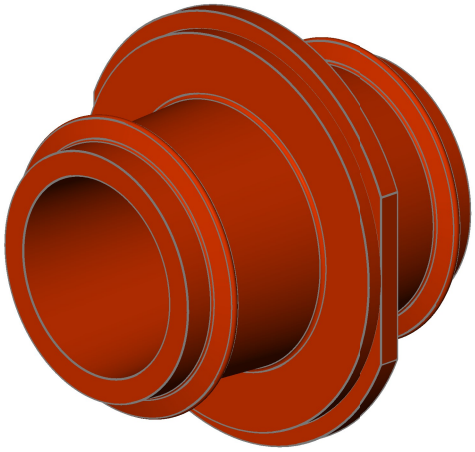

1. Insulator material:
   epoxy compound
2. Voltage, temperature and short circuit requirements
   according to PN-EN 60137
3. Indoor insulator

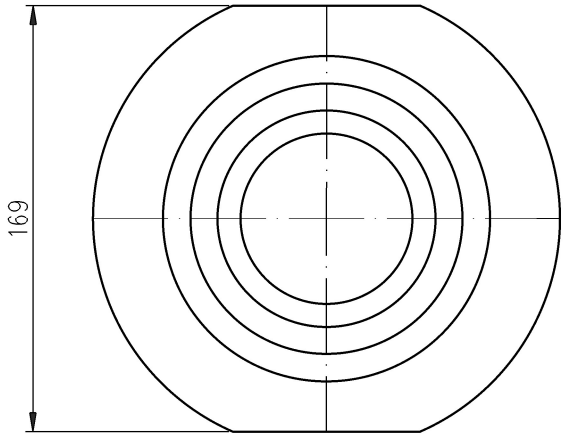


| | | |
|---|---|---|
| Rated insulation voltage | | 12 kV |
| Lighting impulse withstand voltage | | 75 kV |
| Dry withstand alternate voltage (50Hz, 1 min) | | 28 kV |
| Rated current | | 1250 A |
| Bending strength Po | | 20 kN |
| Creepage distance | Du1 | 121 mm |
| | Du2 | 123 mm |
| Weight | | 1,9 kg |

## Example of insulator assembly

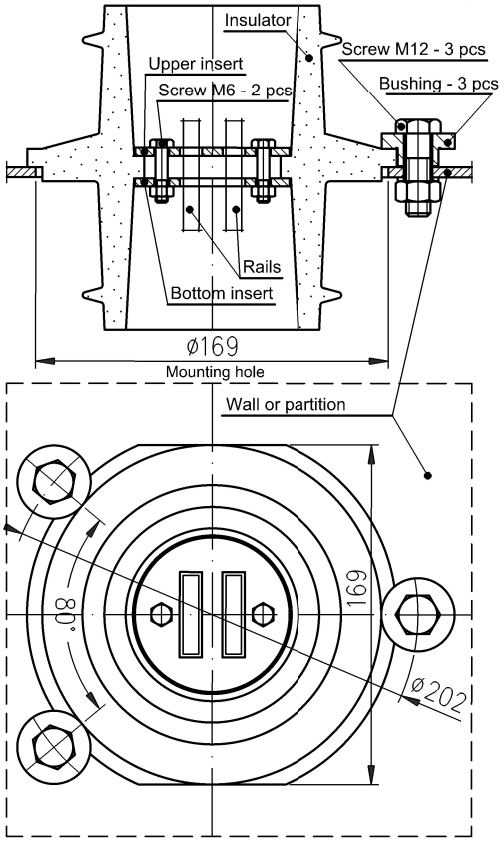


1. Insulator is mounted to subsoil (wall, partition) using three bushings and M12 screws.
2. Bushings are included in the package.
3. Centricity of current rails in relation to the opening of insulator provide upper and lower inserts. The inserts are fitted to insulator using two M6 screws.
4. Inserts, screws M6 and M12 are not included in the package.
5. Inserts are made according to client's specified requirements.

All data can be changed due to technological progress | DT BP.3.101 z dnia 07.11.2008

Order example:
Bushing insulator SPWSG.bp1-20/12/1250.02